# Wiring Diagram: HCVR-AS (Abort Switch)

## Connections for all HCVR-AS models

*The operation of this product is intended for indoor use only.*

The wiring diagram below illustrates connections for all HCVR-AS models of the HCVR-AS Abort Switch:

**Wiring Diagram 1-1**
**HCVR-AS Abort Switch Connections**

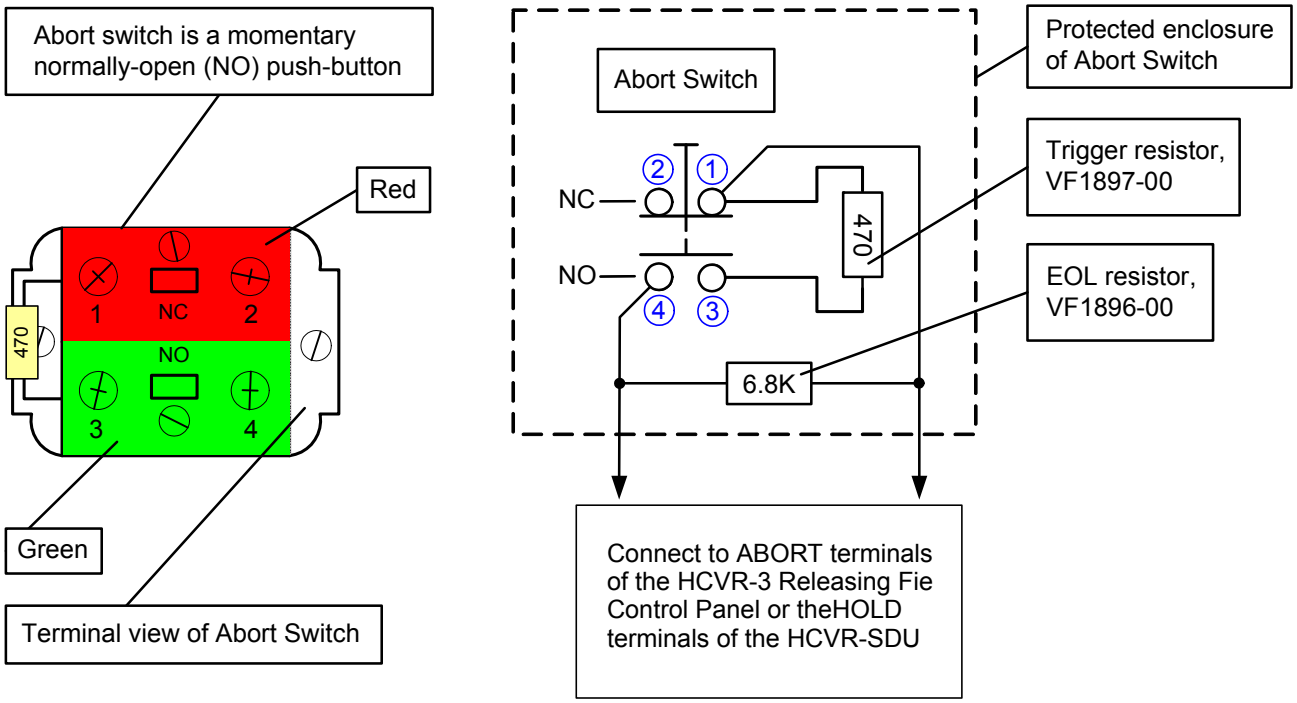


*Reference the following documentation for installing, operating and configuring this device with the HCVR-3 Releasing Fire Control Panel:*

- *Installation and Operation Manual of the HCVR-3 Releasing Fire Control Panel, HA-06-294, V1.XX*
- *Wiring Diagram of the HCVR-AB Ancillary Board, HA-03-394, V1.XX*
- *Wiring Diagram of the HCVR-SDU Status Display Unit, HA-03-393, V1.XX*

## If You Need Help

If you need technical support contact Hochiki America at (800) 845 - 6692 or e-mail technicalsupport@hochiki.com. Technical support is available Monday through Friday, 7:00 AM to 5:00 PM, Pacific Standard Time.